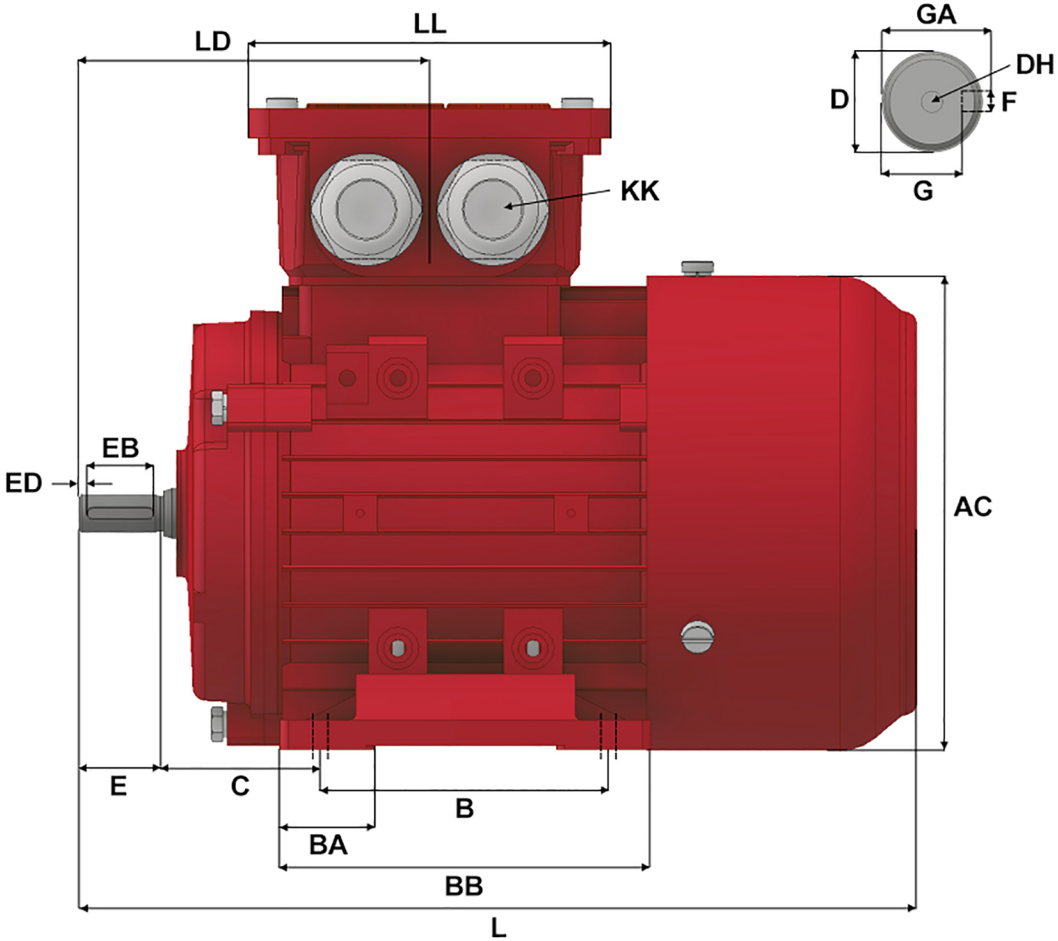

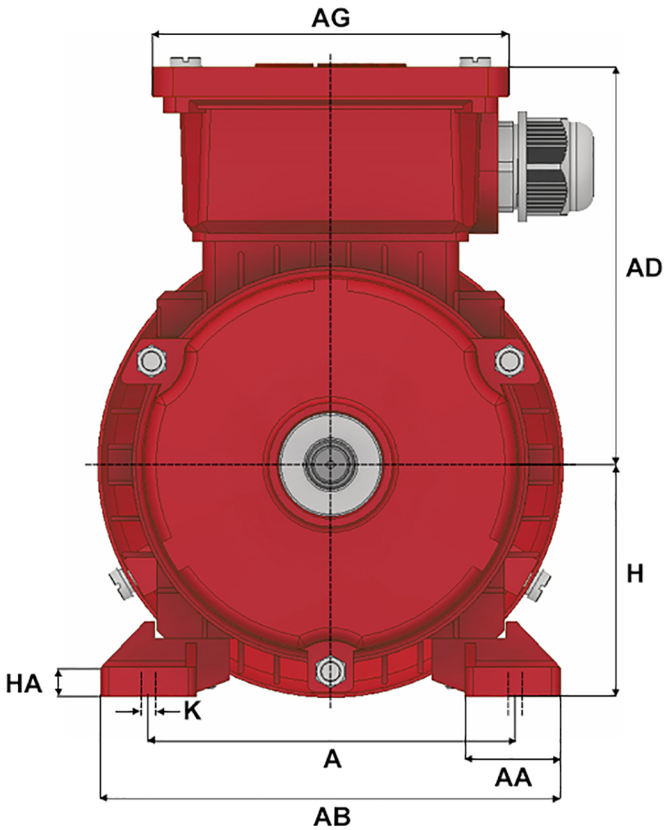

Version: 1JLEM			Revised: 09-11-2019			HP	RPM	FRAME	ENCLOSURE	IJA90S-6-B3		
Customer is responsible in determining that Max Motion product will fit/perform suitably in the intended application						1	1120	90S	TEFC			
A	B	C	D	E	F	G	H	K	L	AA	AB	AC
140	100	56	24	50	8	20	90	10 X 14	320	37	173	175
AD	AG	BA	BB	DH	EB	ED	GA	HA	KK (1)	KK (2)	KK (3)	LD
138	109	31.5	125	M8 X 19	40	5	27	10	M20 X 1.5	3/4'' NPT	-	136
LL												
109												